SPECIFICATION APPLIED

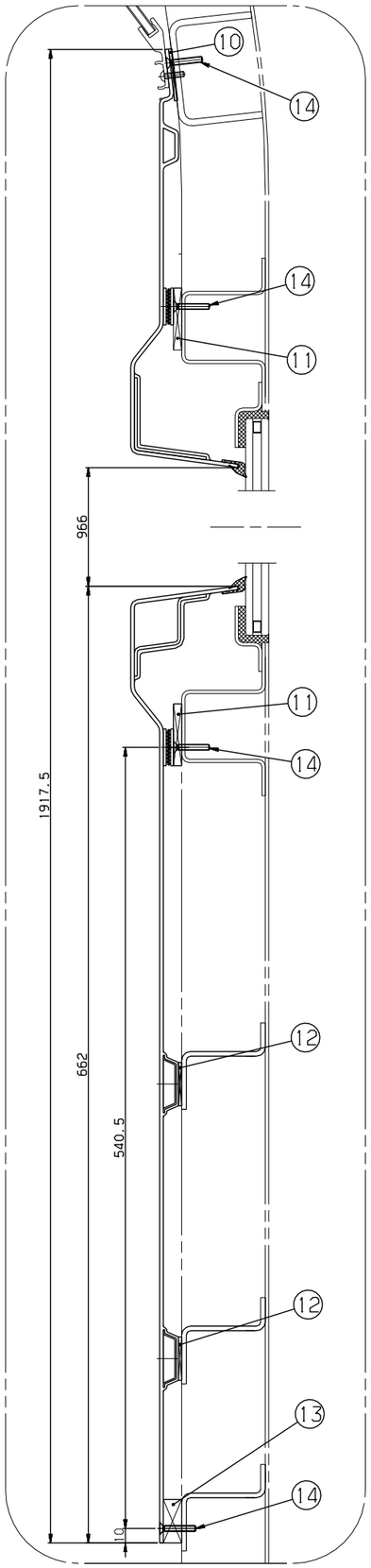

DETAIL D
SCALE=1/2

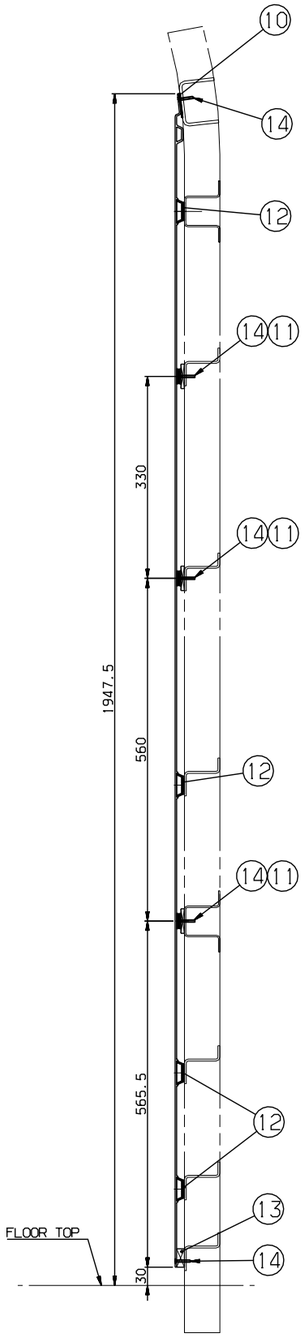

SECTION E-E
SCALE=1/5

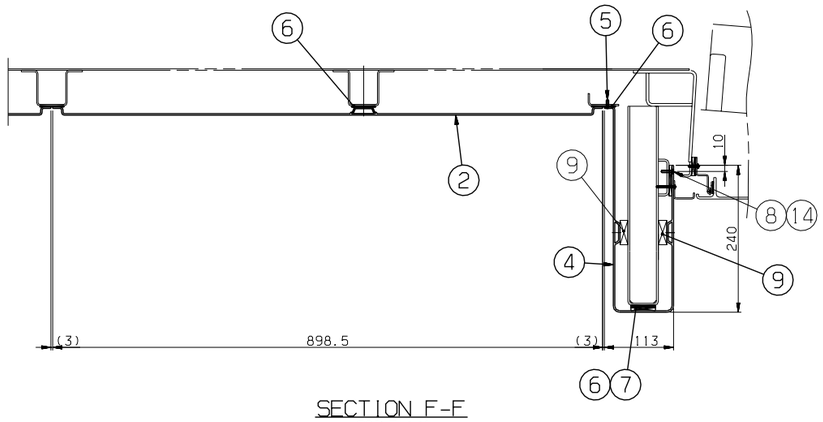

SECTION F-F
SCALE=1/4

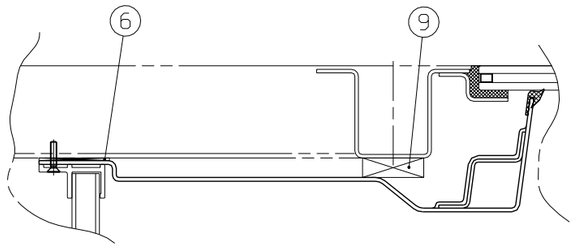

SECTION G-G
SCALE=1/2

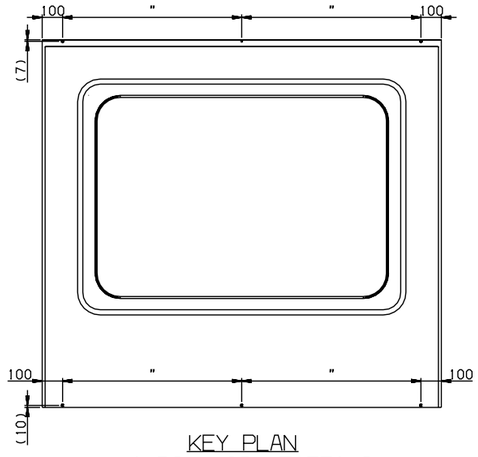

KEY PLAN
(WINDOW MASK FITTING)

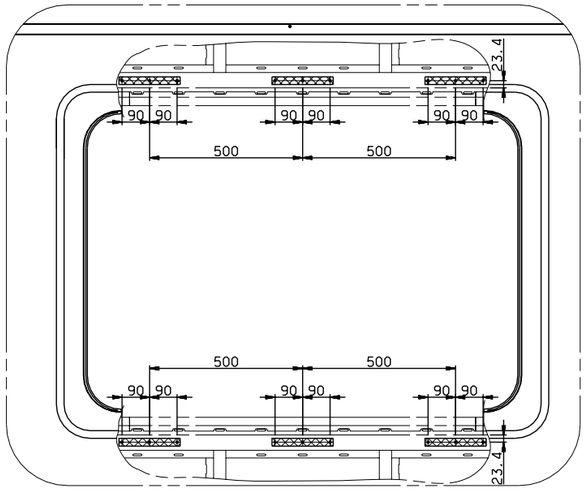

DETAIL H
SCALE=1/10

NOTE
1. PACKING SHOULD BE BONDED TO FRAME AT THE CONTACT PLACE(PANEL/FRAME)
2. SIDE INTERIOR PANEL SHOULD BE FITTED WITH ADHESIVE BEFORE FIXED THE SCREW
3. FIXING SCREW SHOULD BE MAINTAINED DISTANCE IN ORDER TO BE OUT OF SIGHT BY A MOLDING.
4. THE PACKING WHICH IS FITTED WITH ADHESIVE COULD BE ADJUSTABLE ACCORDING TO THE WIDTH AND THICKNESS.
5. THE MANUFACTURER SHOULD BE SUPPLIED THE INTERIOR PANEL ON THE CAR BASE WITH MARKED PART NO.

품번 NO.	부품 번호 PART NO.	품 명 DESCRIPTION	재 질 MATERIAL	수량 Q'TY	검증 V.T	비 고 REMARKS
14	RS60607-101S	SCREW,F.H	SUS304	71		M4x25
13	RFA23040EJ0-013	PACKING	CR	1		T12.7x30x2900 MS39000-004(SC70-F2(CR))
12	RFA23040EJ0-012	PACKING	CR	1		T2.2x30x7600 MS39000-004(SC70-F2(CR))
11	RFA23040EJ0-011	PACKING	CR	1		T5.7x40x6700 MS39000-004(SC70-F2(CR))
10	RFA23040EJ0-010	PACKING	CR	1		T2x30x2900 MS39000-004(SC70-F2(CR))
9	RFA23040EJ0-009	PACKING	CR	1		T12.7x40x6200 MS39000-004(SC70-F2(CR))
8	RFA23040EJ0-008	PACKING	CR	1		T5x50x2200 MS39000-004(SC70-F2(CR))
7	RFA23040EJ0-007	PACKING	CR	1		T5x40x2200 MS39000-004(SC70-F2(CR))
6	RFA23040EJ0-006	PACKING	CR	1		T1.7x40x10500 MS39000-004(SC70-F2(CR))
5	RFA23040EJ0-005	SCREW,F.H	SUS304	7		M4x20(HEAD=M3)
4	RFA23043AN0	PANEL,SIDE ENTRANCE	ASSY	1		
3	RFA23042AN0	PANEL,SIDE TYPE D	ASSY	1		
2	RFA23041AN0	PANEL,SIDE TYPE C	ASSY	1		
1	RFP51136EJ0	WINDOW,MASK,TYPE EE	ASSY	1		

일반공차 GENERAL TOLERANCE			
치수 DIMENSION	~ 40	2	4
	~ 30	2	3
	~ 10	1	1.5
	< 3	0.5	1
길이 LENGTH	~ 3150	-	7
	~ 1600	4	5
	~ 800	3	4
	~ 400	2	3
	~ 200	1.5	2
	~ 100	1	1.5
틈 새 GAP		A	B
접착 ADHESIVE COATING		(±)	
	~ 20M	8	14	24
	~ 15M	7	12	21
	~ 12M	6	10	18
	~ 8M	5	8	14
	~ 4M	4	6	11
	~ 2M	3	4	8
	~ 1M	2	3	6
	~ 315	1	2	4
	~ 120	1	2	3
	~ 30	1	1	1
틈 새 GAP		A	B	C
몰딩 구조물 MOLDING		(±)		
	~ 20M	-	6.0	8.0
	~ 15M	-	5.0	7.0
	~ 12M	-	4.0	6.0
	~ 8M	-	3.0	5.0
	~ 4M	0.8	2.0	4.0
	~ 2M	0.5	1.2	3.0
	~ 1M	0.3	0.8	2.0
	~ 315	0.2	0.5	1.2
	~ 120	0.15	0.2	0.8
	~ 30	0.1	0.2	0.5
	7~6	0.05	0.1	0.2
틈 새 GAP		A	B	C
기계 가공 MACHINING		(±)		

승인 APP	JeongYul Lee 2014.10.02	재질 MAT'L	ASSY
검토 CHK	KeongBong Park 2014.10.02	총중량 G.W	
설계 DGN	HeonUk Lee 2014.10.02	일반공차 MC	B
		MD	B
		CT	B
제도 DRG	HeeSook Jeong 2014.10.02	SIZE	A1

명 칭 TITLE: INSTALLATION, SERVICE ROOM SIDE PANEL (2/2)

도면 번호 DRG. NO: RFA23040EJ0 | MS | Ver. 00 | Rev. --

SCALE 1/20 | 매수 SHEET 2 of 2

참조번호 REF. NO.

HYUNDAI Rotem 현대로템주식회사

기호 MARK	일자 DATE	개정 내용 DETAIL OF REVISION(E.C ZONE)	설변번호 E.C NO.	설계 DGN	검토 CHK	승인 APP
기호 MARK	일자 DATE	개정 내용 DETAIL OF REVISION(E.C ZONE)	설변번호 E.C NO.	설계 DGN	검토 CHK	승인 APP

본 도면은 당사 재산권과 기밀에 속하며 무단복사/배포 금지됨. PROPERTY OF ISSUING ENTITY. CANNOT BE DISTRIBUTED OR REPRODUCED WITHOUT AUTHORIZATION.

RSD1402 | RFA- | 넌-PRJT | 심리분출 | CATIA